Chapter 13: I/O Systems

Chapter 13: I/O Systems

- I/O Hardware
- Application I/O Interface
- Kernel I/O Subsystem
- Transforming I/O Requests to Hardware Operations
- STREAMS
- Performance

Objectives

- Explore the structure of an operating system's I/O subsystem
- Discuss the principles of I/O hardware and its complexity
- Provide details of the performance aspects of I/O hardware and software

Overview

- I/O management is a major component of operating system design and operation
  - Important aspect of computer operation
  - I/O devices vary greatly
  - Various methods to control them
  - Performance management
  - New types of devices frequent
- Ports, busses, device controllers connect to various devices
- **Device drivers** encapsulate device details
  - Present uniform device-access interface to I/O subsystem

I/O Hardware

- Incredible variety of I/O devices
  - Storage
  - Transmission
  - Human-interface
- Common concepts – signals from I/O devices interface with computer
  - **Port** – connection point for device
  - **Bus - daisy chain** or shared direct access
  - **Controller** (**host adapter**) – electronics that operate port, bus, device
    - Sometimes integrated
    - Sometimes separate circuit board (host adapter)
    - Contains processor, microcode, private memory, bus controller, etc
      - Some talk to per-device controller with bus controller, microcode, memory, etc

A Typical PC Bus Structure

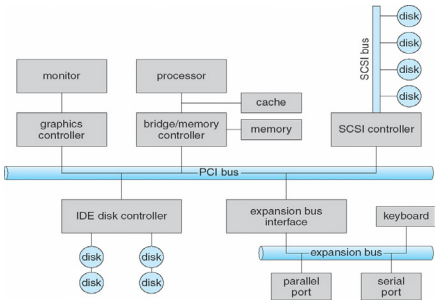

I/O Hardware (Cont.)

- I/O instructions control devices
- Devices usually have registers where device driver places commands, addresses, and data to write, or read data from registers after command execution
  - Data-in register, data-out register, status register, control register
  - Typically 1-4 bytes, or FIFO buffer
- Devices have addresses, used by
  - Direct I/O instructions
  - **Memory-mapped I/O**
    - Device data and command registers mapped to processor address space
    - Especially for large address spaces (graphics)

Device I/O Port Locations on PCs (partial)

I/O address range (hexadecimal)	device
000–00F	DMA controller
020–021	interrupt controller
040–043	timer
200–20F	game controller
2F8–2FF	serial port (secondary)
320–32F	hard-disk controller
378–37F	parallel port
3D0–3DF	graphics controller
3F0–3F7	diskette-drive controller
3F8–3FF	serial port (primary)

Polling

- For each byte of I/O
  1. Read busy bit from status register until 0
  2. Host sets read or write bit and if write copies data into data-out register
  3. Host sets command-ready bit
  4. Controller sets busy bit, executes transfer
  5. Controller clears busy bit, error bit, command-ready bit when transfer done
- Step 1 is **busy-wait** cycle to wait for I/O from device
  - Reasonable if device is fast
  - But inefficient if device slow
  - CPU switches to other tasks?
    - But if miss a cycle data overwritten / lost

Interrupts

- Polling can happen in 3 instruction cycles
  - Read status, logical-and to extract status bit, branch if not zero
  - How to be more efficient if non-zero infrequently?
- CPU **Interrupt-request line** triggered by I/O device
  - Checked by processor after each instruction
- **Interrupt handler** receives interrupts
  - **Maskable** to ignore or delay some interrupts
- Interrupt vector to dispatch interrupt to correct handler
  - Context switch at start and end
  - Based on priority
  - Some **nonmaskable**
  - Interrupt chaining if more than one device at same interrupt number

Interrupt-Driven I/O Cycle

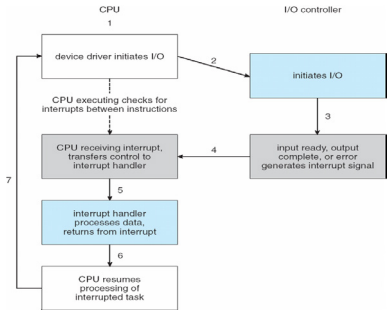

Intel Pentium Processor Event-Vector Table

vector number	description
0	divide error
1	debug exception
2	null interrupt
3	breakpoint
4	INTO-detected overflow
5	bound range exception
6	invalid opcode
7	device not available
8	double fault
9	coprocessor segment overrun (reserved)
10	invalid task state segment
11	segment not present
12	stack fault
13	general protection
14	page fault
15	(Intel reserved, do not use)
16	floating-point error
17	alignment check
18	machine check
19–31	(Intel reserved, do not use)
32–255	maskable interrupts

Interrupts (Cont.)

- Interrupt mechanism also used for exceptions
  - Terminate process, crash system due to hardware error
- Page fault executes when memory access error
- System call executes via trap to trigger kernel to execute request
- Multi-CPU systems can process interrupts concurrently
  - If operating system designed to handle it
- Used for time-sensitive processing, frequent, must be fast

Direct Memory Access

- Used to avoid **programmed I/O** (one byte at a time) for large data movement
- Requires **DMA** controller
- Bypasses CPU to transfer data directly between I/O device and memory
- OS writes DMA command block into memory
  - Source and destination addresses
  - Read or write mode
  - Count of bytes
  - Writes location of command block to DMA controller
  - Bus mastering of DMA controller – grabs bus from CPU
  - When done, interrupts to signal completion

Six Step Process to Perform DMA Transfer

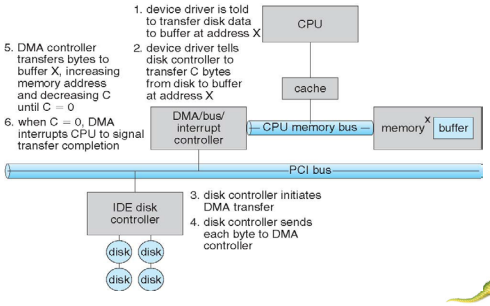

Application I/O Interface

- I/O system calls encapsulate device behaviors in generic classes
- Device-driver layer hides differences among I/O controllers from kernel
- New devices talking already-implemented protocols need no extra work
- Each OS has its own I/O subsystem structures and device driver frameworks
- Devices vary in many dimensions
  - **Character-stream** or **block**
  - **Sequential** or **random-access**
  - **Synchronous** or **asynchronous** (or both)
  - **Sharable** or **dedicated**
  - **Speed of operation**
  - **read-write**, **read only**, or **write only**

A Kernel I/O Structure

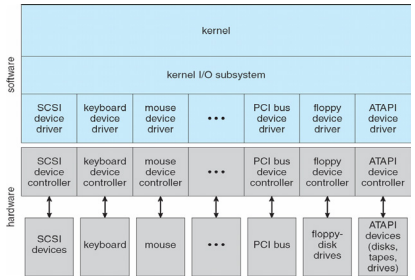

Characteristics of I/O Devices

aspect	variation	example
data-transfer mode	character block	terminal disk
access method	sequential random	modem CD-ROM
transfer schedule	synchronous asynchronous	tape keyboard
sharing	dedicated sharable	tape keyboard
device speed	latency seek time transfer rate delay between operations	
I/O direction	read only write only read–write	CD-ROM graphics controller disk

Characteristics of I/O Devices (Cont.)

- Subtleties of devices handled by device drivers
- Broadly I/O devices can be grouped by the OS into
  - Block I/O
  - Character I/O (Stream)
  - Memory-mapped file access
  - Network sockets
- For direct manipulation of I/O device specific characteristics, usually an escape / back door
  - Unix `ioctl()` call to send arbitrary bits to a device control register and data to device data register

Block and Character Devices

- Block devices include disk drives
  - Commands include read, write, seek
  - **Raw I/O**, **direct I/O**, or file-system access
  - Memory-mapped file access possible
    - File mapped to virtual memory and clusters brought via demand paging
  - DMA
- Character devices include keyboards, mice, serial ports
  - Commands include `get()`, `put()`
  - Libraries layered on top allow line editing

Network Devices

- Varying enough from block and character to have own interface
- Unix and Windows NT/9x/2000 include **socket** interface
  - Separates network protocol from network operation
  - Includes `select()` functionality
- Approaches vary widely (pipes, FIFOs, streams, queues, mailboxes)

Clocks and Timers

- Provide current time, elapsed time, timer
- Normal resolution about 1/60 second
- Some systems provide higher-resolution timers
- **Programmable interval timer** used for timings, periodic interrupts
- `ioctl()` (on UNIX) covers odd aspects of I/O such as clocks and timers

Blocking and Nonblocking I/O

- **Blocking** - process suspended until I/O completed
  - Easy to use and understand
  - Insufficient for some needs
- **Nonblocking** - I/O call returns as much as available
  - User interface, data copy (buffered I/O)
  - Implemented via multi-threading
  - Returns quickly with count of bytes read or written
  - `select()` to find if data ready then `read()` or `write()` to transfer
- **Asynchronous** - process runs while I/O executes
  - Difficult to use
  - I/O subsystem signals process when I/O completed

Two I/O Methods

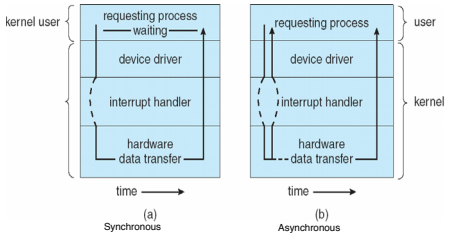

Kernel I/O Subsystem

- Scheduling
  - Some I/O request ordering via per-device queue
  - Some OSs try fairness
  - Some implement Quality Of Service (i.e. IPQOS)
- Buffering - store data in memory while transferring between devices
  - To cope with device speed mismatch
  - To cope with device transfer size mismatch
  - To maintain "copy semantics"
  - Double buffering – two copies of the data
    - Kernel and user
    - Varying sizes
    - Full / being processed and not-full / being used
    - Copy-on-write can be used for efficiency in some cases

Device-status Table

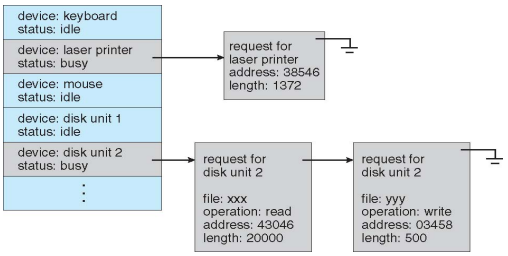

Sun Enterprise 6000 Device-Transfer Rates

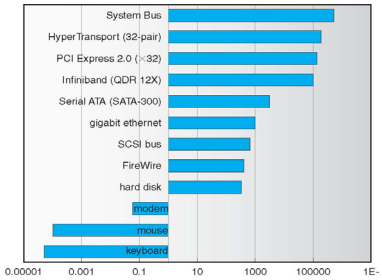

Kernel I/O Subsystem

- **Caching** - faster device holding copy of data
  - Always just a copy
  - Key to performance
  - Sometimes combined with buffering
- **Spooling** - hold output for a device
  - If device can serve only one request at a time
  - i.e., Printing
- **Device reservation** - provides exclusive access to a device
  - System calls for allocation and de-allocation
  - Watch out for deadlock

Error Handling

- OS can recover from disk read, device unavailable, transient write failures
  - Retry a read or write, for example
  - Some systems more advanced – Solaris FMA, AIX
    - Track error frequencies, stop using device with increasing frequency of retry-able errors
- Most return an error number or code when I/O request fails
- System error logs hold problem reports

I/O Protection

- User process may accidentally or purposefully attempt to disrupt normal operation via illegal I/O instructions
  - All I/O instructions defined to be privileged
  - I/O must be performed via system calls
    - Memory-mapped and I/O port memory locations must be protected too

Use of a System Call to Perform I/O

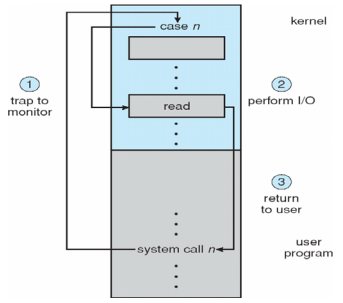

Kernel Data Structures

- Kernel keeps state info for I/O components, including open file tables, network connections, character device state
- Many, many complex data structures to track buffers, memory allocation, "dirty" blocks
- Some use object-oriented methods and message passing to implement I/O
  - Windows uses message passing
    - Message with I/O information passed from user mode into kernel
    - Message modified as it flows through to device driver and back to process
    - Pros / cons?

UNIX I/O Kernel Structure

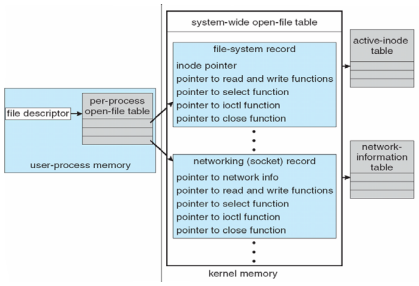

I/O Requests to Hardware Operations

- Consider reading a file from disk for a process:
  - Determine device holding file
  - Translate name to device representation
  - Physically read data from disk into buffer
  - Make data available to requesting process
  - Return control to process

Life Cycle of An I/O Request

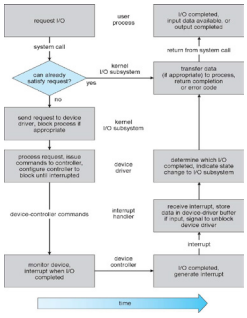

STREAMS

- **STREAM** – a full-duplex communication channel between a user-level process and a device in Unix System V and beyond
- A STREAM consists of:
  - STREAM head interfaces with the user process
  - driver end interfaces with the device
  - zero or more STREAM modules between them
- Each module contains a **read queue** and a **write queue**
- Message passing is used to communicate between queues
  - **Flow control** option to indicate available or busy
- Asynchronous internally, synchronous where user process communicates with stream head

The STREAMS Structure

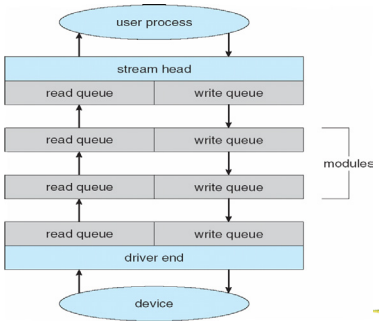

Performance

- I/O a major factor in system performance:
  - Demands CPU to execute device driver, kernel I/O code
  - Context switches due to interrupts
  - Data copying
  - Network traffic especially stressful

Intercomputer Communications

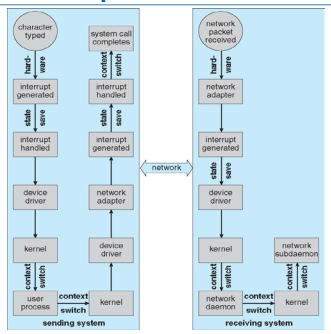

Improving Performance

- Reduce number of context switches
- Reduce data copying
- Reduce interrupts by using large transfers, smart controllers, polling
- Use DMA
- Use smarter hardware devices
- Balance CPU, memory, bus, and I/O performance for highest throughput
- Move user-mode processes / daemons to kernel threads

Device-Functionality Progression

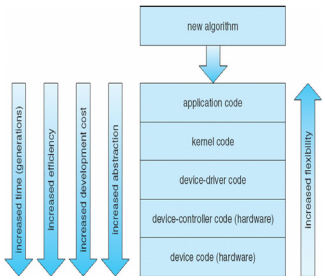

End of Chapter 12